LOW-POWER DIFFERENTIAL LINE DRIVER AND RECEIVER PAIRS

FEATURES

- **High-Speed Low-Power LinBICMOS™ Circuitry Designed for Signaling Rates[(1)] of up to 30 Mbps**
- **Bus-Pin ESD Protection 15 kV HBM**
- **Low Disabled Supply-Current Requirements: 700 μA Maximum**
- **Designed for High-Speed Multipoint Data Transmission Over Long Cables**
- **Common-Mode Voltage Range of –7 V to 12 V**
- **Low Supply Current: 15 mA Max**
- **Compatible With ANSI Standard TIA/EIA-485-A and ISO 8482:1987(E)**
- **Positive and Negative Output Current Limiting**
- **Driver Thermal Shutdown Protection**

(1) Signaling rate by TIA/EIA-485-A definition restrict transition times to 30% of the bit duration, and much higher signaling rates may be achieved without this requirement as displayed in the *TYPICAL CHARACTERISTICS* of this device.

SN65LBC180AD (Marked as BL180A)
SN65LBC180AN (Marked as 65LBC180A)
SN75LBC180AD (Marked as LB180A)
SN75LBC180AN (Marked as 75LBC180A)
(TOP VIEW)

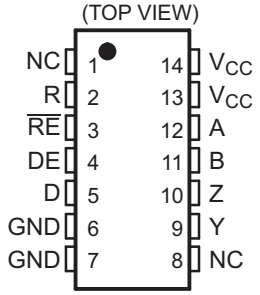

NC – No internal connection
Pins 6 and 7 are connected together internally
Pins 13 and 14 are connected together internally

DESCRIPTION

The SN65LBC180A and SN75LBC180A differential driver and receiver pairs are monolithic integrated circuits designed for bidirectional data communication over long cables that take on the characteristics of transmission lines. They are balanced, or differential, voltage mode devices that are compatible with ANSI standard TIA/EIA-485-A and ISO 8482:1987(E). The A version offers improved switching performance over its predecessors without sacrificing significantly more power.

These devices combine a differential line driver and differential input line receiver and operate from a single 5-V power supply. The driver differential outputs and the receiver differential inputs are connected to separate terminals for full-duplex operation and are designed to present minimum loading to the bus when powered off (V_{CC} = 0). These parts feature wide positive and negative common-mode voltage ranges, making them suitable for point-to-point or multipoint data bus applications. The devices also provide positive and negative current limiting for protection from line fault conditions. The SN65LBC180A is characterized for operation from –40°C to 85°C, and the SN75LBC180A is characterized for operation from 0°C to 70°C.

FUNCTION TABLE[(1)]

DRIVER				RECEIVER		
INPUT D	ENABLE DE	OUTPUTS		DIFFERENTIAL INPUTS A – B	ENABLE $\overline{RE}$	OUTPUT R
		Y	Z	$V_{ID} \geq 0.2$ V	L	H
H	H	H	L	-0.2 V < V_{ID} < 0.2 V	L	?
L	H	L	H	$V_{ID} \leq$ -0.2 V	L	L
X	L	Z	Z	X	H	Z
OPEN	H	H	L	Open circuit	L	H

(1) H = high level, L = low level, ? = indeterminate, X = irrelevant, Z = high impedance (off)

Please be aware that an important notice concerning availability, standard warranty, and use in critical applications of Texas Instruments semiconductor products and disclaimers thereto appears at the end of this data sheet.
LinBICMOS is a trademark of Texas Instruments.

PRODUCTION DATA information is current as of publication date. Products conform to specifications per the terms of the Texas Instruments standard warranty. Production processing does not necessarily include testing of all parameters.

Copyright © 2000–2009, Texas Instruments Incorporated

These devices have limited built-in ESD protection. The leads should be shorted together or the device placed in conductive foam during storage or handling to prevent electrostatic damage to the MOS gates.

LOGIC SYMBOL[(1)]

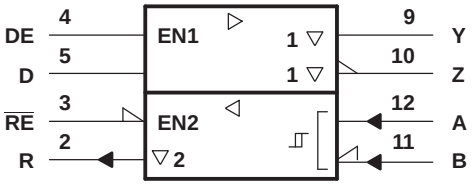

(1) This symbol is in accordance with ANSI/IEEE Std 91-1984 and IEC Publication 617-12.

LOGIC DIAGRAM (POSITIVE LOGIC)

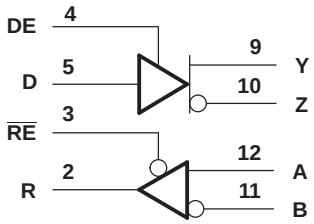

AVAILABLE OPTIONS[(1)]

T_A	PACKAGE	
	SMALL OUTLINE[(2)] (D)	PLASTIC DUAL-IN-LINE (N)
0°C to 70°C	SN75LBC180AD	SN75LBC180AN
–40°C to 85°C	SN65LBC180AD	SN65LBC180AN

(1) For the most current package and ordering information, see the Package Option Addendum at the end of this document, or see the TI website at www.ti.com.
(2) The D package is available taped and reeled. Add an R suffix to the part number (i.e., SN65LBC180ADR).

Copyright © 2000–2009, Texas Instruments Incorporated

SCHEMATICS OF INPUTS AND OUTPUTS

D, DE, and $\overline{RE}$ Inputs

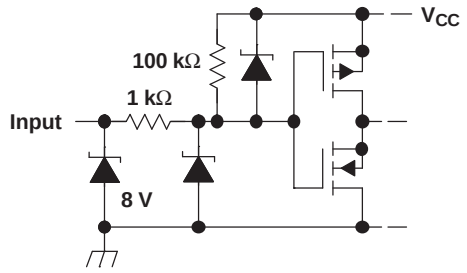

A Input

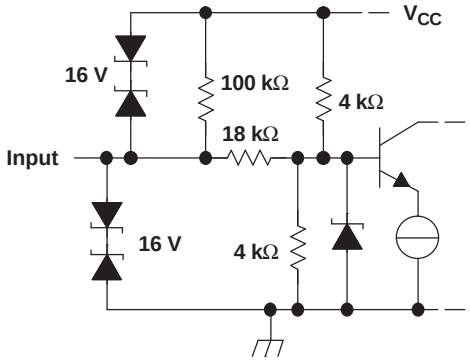

B Input

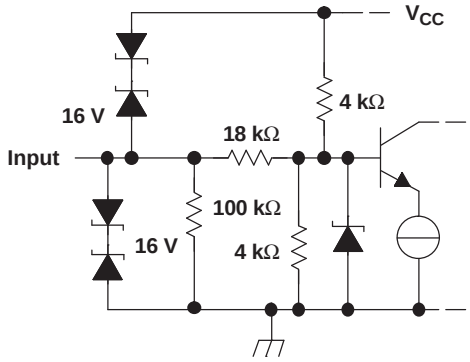

Y AND Z Outputs

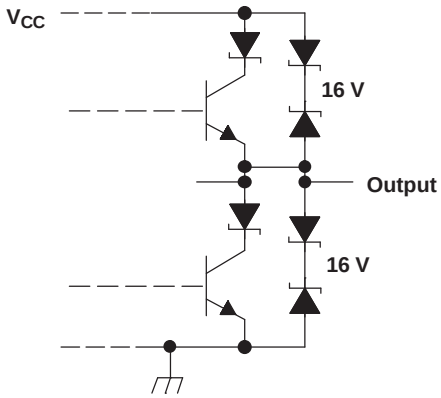

R Output

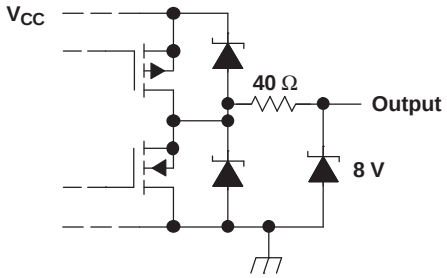

ABSOLUTE MAXIMUM RATINGS[1]

over operating free-air temperature range (unless otherwise noted)

			UNIT
V_{CC}	Supply voltage range[2]		–0.3 V to 6 V
V_I	Input voltage range	A, B	–10 V to 15 V
	Voltage range	D, R, DE, $\overline{RE}$	–0.3 V to V_{CC} + 0.5 V
I_O	Receiver output current		±10 mA
	Continuous total power dissipation[3]		Internally limited
	Total power dissipation		See Dissipation Rating Table
ESD	Bus terminals and GND	HBM (Human Body Model) EIA/JESD22-A114[4]	±15 kV
	All pins	HBM (Human Body Model) EIA/JESD22-A114[4]	±3 kV
		MM (Machine Model) EIA/JESD22-A115	±400 V
		CDM (Charge Device Model) EIA/JESD22-C101	±1.5 kV

(1) Stresses beyond those listed under *absolute maximum ratings* may cause permanent damage to the device. These are stress ratings only, and functional operation of the device at these or any other conditions beyond those indicated under *recommended operating conditions* is not implied. Exposure to absolute-maximum-rated conditions for extended periods may affect device reliability.
(2) All voltage values are with respect to GND except for differential input or output voltages.
(3) The maximum operating junction temperature is internally limited. Use the dissipation rating table to operate below this temperature.
(4) Tested in accordance with MIL-STD-883C, Method 3015.7.

DISSIPATION RATINGS

PACKAGE	T_A ≤ 25°C POWER RATING	DERATING FACTOR[1] ABOVE T_A = 25°C	T_A = 70°C POWER RATING	T_A = 85°C POWER RATING
D	950 mW	7.6 mW/°C	608 mW	494 mW
N	1150 mW	9.2 mW/°C	736 mW	598 mW

(1) This is the inverse of the junction-to-ambient thermal resistance when board-mounted and with no air flow.

RECOMMENDED OPERATING CONDITIONS

			MIN	NOM	MAX	UNIT
V_{CC}	Supply voltage		4.75	5	5.25	V
V_{IH}	High-level input voltage	D, DE, and $\overline{RE}$	2		V_{CC}	V
V_{IL}	Low-level input voltage	D, DE, and $\overline{RE}$	0		0.8	V
V_{ID}	Differential input voltage[1]		–12[2]		12	V
V_O, V_I, V_{IC}	Voltage at any bus terminal (separately or common mode)	A, B, Y, or Z	–7		12	V
I_{OH}	High-level output current	Y or Z	–60			mA
		R	–8			
I_{OL}	Low-level output current	Y or Z			60	mA
		R			8	
T_A	Operating free-air temperature	SN65LBC180A	–40		85	°C
		SN75LBC180A	0		70	

(1) Differential input/output bus voltage is measured at the noninverting terminal with respect to the inverting terminal.
(2) The algebraic convention, where the least positive (more negative) limit is designated minimum, is used in this data sheet.

Copyright © 2000–2009, Texas Instruments Incorporated

DRIVER ELECTRICAL CHARACTERISTICS

over recommended operating conditions (unless otherwise noted)

PARAMETER		TEST CONDITIONS		MIN	TYP(1)	MAX	UNIT
V_{IK}	Input clamp voltage	I_I = –18 mA		–1.5	–0.8		V
$\|V_{OD}\|$	Differential output voltage magnitude	R_L = 54 Ω, See Figure 1	SN65LBC180A	1	1.5	3	V
			SN75LBC180A	1.1	1.5	3	
		R_L = 60 Ω, See Figure 2	SN65LBC180A	1	1.5	3	V
			SN75LBC180A	1.1	1.5	3	
$\Delta\|V_{OD}\|$	Change in magnitude of differential output voltage(2)	See Figure 1 and Figure 2		–0.2		0.2	V
$V_{OC(ss)}$	Steady-state common-mode output voltage	See Figure 1		1.8	2.4	2.8	V
ΔV_{OC}	Change in steady-state common-mode output voltage(2)			–0.1		0.1	V
I_O	Output current with power off	V_{CC} = 0 ,	V_O = –7 V to 12 V	–10		10	µA
I_{IH}	High-level input current	V_I = 2 V		–100			µA
I_{IL}	Low-level input current	V_I = 0.8 V		–100			µA
I_{OS}	Short-circuit output current	–7 V ≤ V_O ≤ 12 V		–250	±70	250	mA
I_{CC}	Supply current	V_I = 0 or V_{CC}, No load	Receiver disabled and driver enabled		5.5	9	mA
			Receiver disabled and driver disabled		0.5	1	
			Receiver enabled and driver enabled		8.5	15	

(1) All typical values are at V_{CC} = 5 V, T_A = 25°C.
(2) $\Delta|V_{OD}|$ and $\Delta|V_{OC}|$ are the changes in the steady-state magnitude of V_{OD} and V_{OC}, respectively, that occur when the input is changed from a high level to a low level.

DRIVER SWITCHING CHARACTERISTICS

over recommended operating conditions (unless otherwise noted)

PARAMETER		TEST CONDITIONS	MIN	TYP	MAX	UNIT
t_{PLH}	Propagation delay time, low-to-high-level output	R_L = 54 Ω, C_L = 50 pF, See Figure 3	2	6	12	ns
t_{PHL}	Propagation delay time, high-to-low-level output		2	6	12	ns
$t_{sk(p)}$	Pulse skew ($\|t_{PLH} – t_{PHL}\|$)			0.3	1	ns
t_r	Differential output signal rise time		4	7.5	11	ns
t_f	Differential output signal fall time		4	7.5	11	ns
t_{PZH}	Propagation delay time, high-impedance-to-high-level output	R_L = 110 Ω, See Figure 4		12	22	ns
t_{PZL}	Propagation delay time, high-impedance-to-low-level output	R_L = 110 Ω, See Figure 5		12	22	ns
t_{PHZ}	Propagation delay time, high-level-to-high-impedance output	R_L = 110 Ω, See Figure 4		12	22	ns
t_{PLZ}	Propagation delay time, low-level-to-high-impedance output	R_L = 110 Ω, See Figure 5		12	22	ns

Copyright © 2000–2009, Texas Instruments Incorporated

RECEIVER ELECTRICAL CHARACTERISTICS

over recommended operating conditions (unless otherwise noted)

PARAMETER		TEST CONDITIONS		MIN	TYP(1)	MAX	UNIT
V_{IT+}	Positive-going input threshold voltage	I_O = –8 mA				0.2	V
V_{IT-}	Negative-going input threshold voltage	I_O = 8 mA		–0.2			V
V_{hys}	Hysteresis voltage ($V_{IT+} – V_{IT-}$)				50		mV
V_{IK}	Enable-input clamp voltage	I_I = –18 mA		–1.5	–0.8		V
V_{OH}	High-level output voltage	V_{ID} = 200 mV, I_{OH} = –8 mA		4	4.9		V
V_{OL}	Low-level output voltage	V_{ID} = –200 mV, I_{OL} = 8 mA			0.1	0.8	V
I_{OZ}	High-impedance-state output current	V_O = 0 V to V_{CC}		–1		1	µA
I_{IH}	High-level enable-input current	V_{IH} = 2.4 V		–100			µA
I_{IL}	Low-level enable-input current	V_{IL} = 0.4 V		–100			µA
I_I	Bus input current	V_I = 12 V, V_{CC} = 5 V	Other input at 0 V		0.4	1	mA
		V_I = 12 V, V_{CC} = 0			0.5	1	
		V_I = –7 V, V_{CC} = 5 V		–0.8	–0.4		
		V_I = –7 V, V_{CC} = 0		–0.8	–0.3		
I_{CC}	Supply current	V_I = 0 or V_{CC}, No load	Receiver enabled and driver disabled		4.5	7.5	mA
			Receiver disabled and driver disabled		0.5	1	
			Receiver enabled and driver enabled		8.5	15	

(1) All typical values are at V_{CC} = 5 V and T_A = 25°C.

RECEIVER SWITCHING CHARACTERISTICS

over recommended operating conditions (unless otherwise noted)

PARAMETER		TEST CONDITIONS	MIN	TYP	MAX	UNIT
t_{PLH}	Propagation delay time, low-to-high-level output	V_{ID} = –1.5 V to 1.5 V, See Figure 7	7	13	20	ns
t_{PHL}	Propagation delay time, high-to-low-level output		7	13	20	ns
$t_{sk(p)}$	Pulse skew (| $t_{PHL} – t_{PLH}$ |)			0.5	1.5	ns
t_r	Output signal rise time			2.1	3.3	ns
t_f	Output signal fall time	See Figure 7		2.1	3.3	ns
t_{PZH}	Output enable time to high level	C_L = 10 pF, See Figure 8		30	45	ns
t_{PZL}	Output enable time to low level			30	45	ns
t_{PHZ}	Output disable time from high level			20	40	ns
t_{PLZ}	Output disable time from low level			20	40	ns

PARAMETER MEASUREMENT INFORMATION

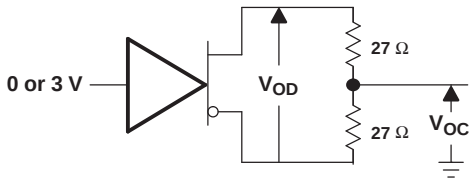

Figure 1. Driver V_{OD} and V_{OC}

Copyright © 2000–2009, Texas Instruments Incorporated

PARAMETER MEASUREMENT INFORMATION (continued)

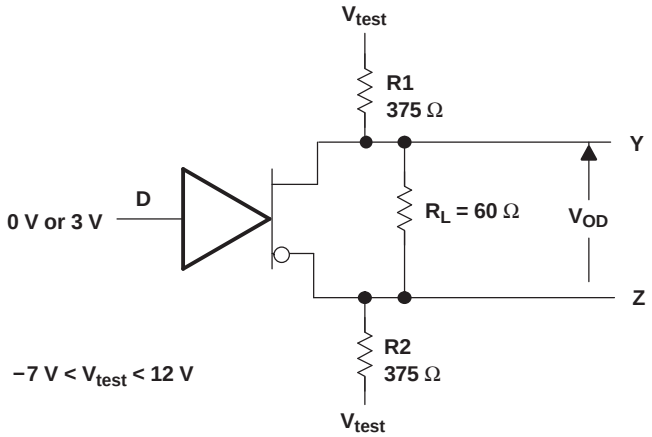

Figure 2. Driver V_{OD}

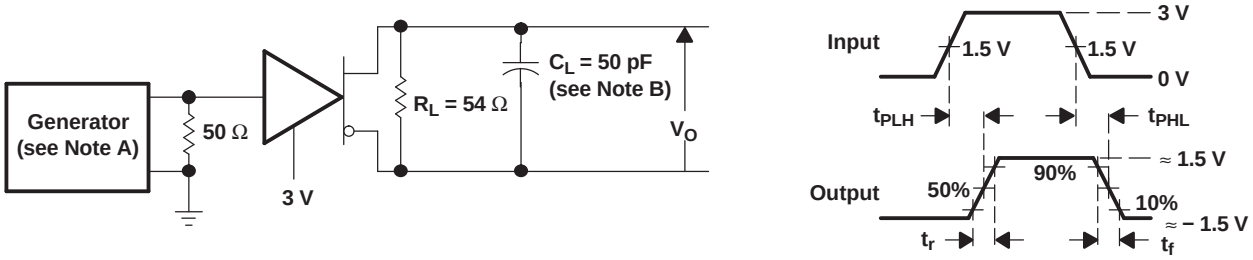

TEST CIRCUIT

VOLTAGE WAVEFORMS

A. The input pulse is supplied by a generator having the following characteristics: PRR ≤ 1 MHz, 50% duty cycle, t_r ≤ 6 ns, t_f ≤ 6 ns, Z_O = 50 Ω.

B. C_L includes probe and jig capacitance.

Figure 3. Driver Test Circuit and Voltage Waveforms

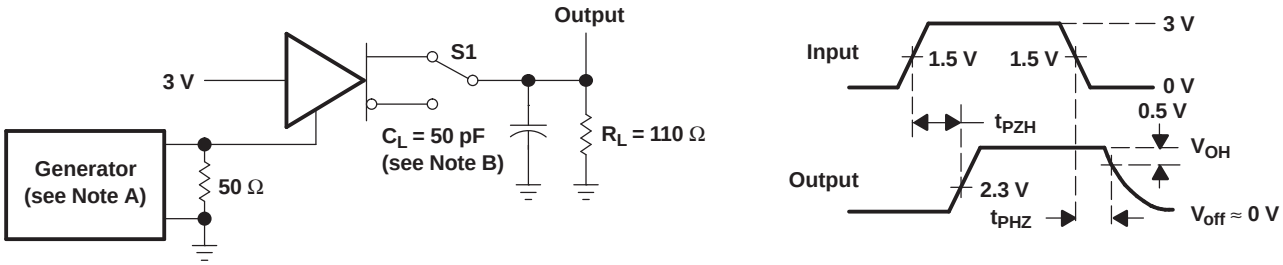

TEST CIRCUIT

VOLTAGE WAVEFORMS

A. The input pulse is supplied by a generator having the following characteristics: PRR ≤ 1 MHz, 50% duty cycle, t_r ≤ 6 ns, t_f ≤ 6 ns, Z_O = 50 Ω.

B. C_L includes probe and jig capacitance.

Figure 4. Driver Test Circuit and Voltage Waveforms

Copyright © 2000–2009, Texas Instruments Incorporated

PARAMETER MEASUREMENT INFORMATION (continued)

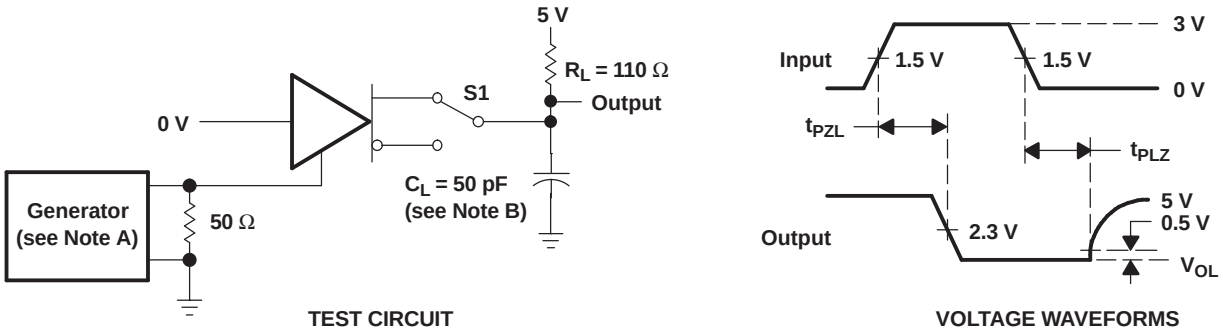

A. The input pulse is supplied by a generator having the following characteristics: PRR ≤ 1 MHz, 50% duty cycle, t_r ≤ 6 ns, t_f ≤ 6 ns, Z_O = 50 Ω.

B. C_L includes probe and jig capacitance.

Figure 5. Driver Test Circuit and Voltage Waveforms

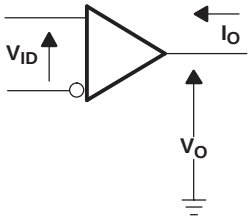

Figure 6. Receiver V_{OH} and V_{OL}

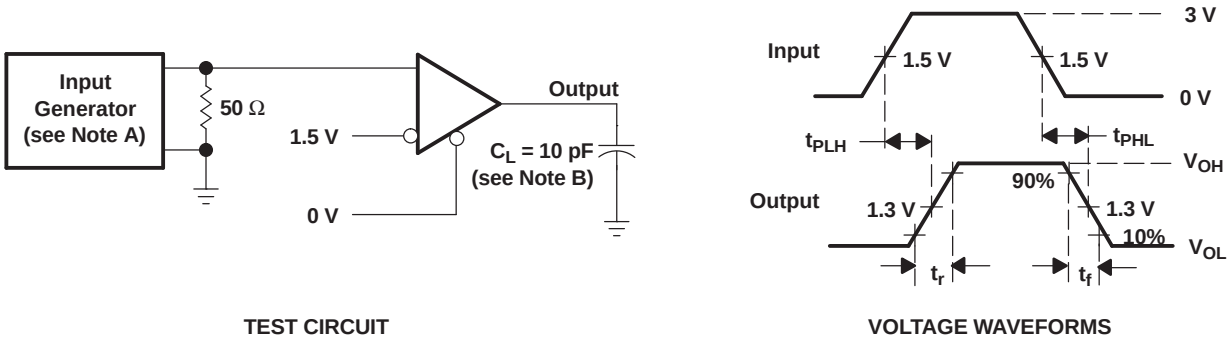

A. The input pulse is supplied by a generator having the following characteristics: PRR ≤ 1 MHz, 50% duty cycle, t_r ≤ 6 ns, t_f ≤ 6 ns, Z_O = 50 Ω.

B. C_L includes probe and jig capacitance.

Figure 7. Receiver Test Circuit and Voltage Waveforms

Copyright © 2000–2009, Texas Instruments Incorporated

PARAMETER MEASUREMENT INFORMATION (continued)

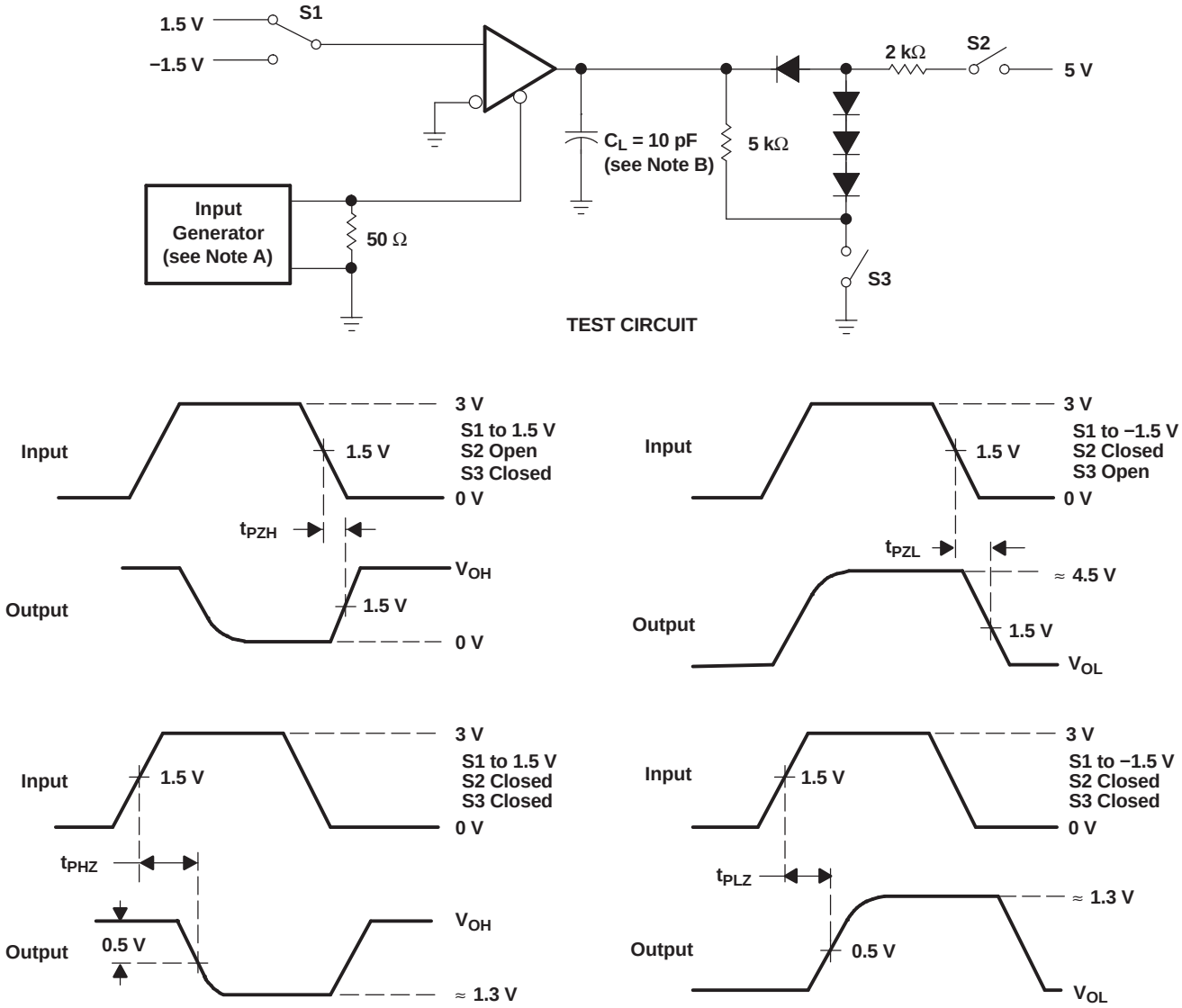

VOLTAGE WAVEFORMS

A. The input pulse is supplied by a generator having the following characteristics: PRR ≤ 1 MHz, 50% duty cycle, t_r ≤ 6 ns, t_f ≤ 6 ns, Z_O = 50 Ω.

B. C_L includes probe and jig capacitance.

Figure 8. Receiver Output Enable and Disable Times

TYPICAL CHARACTERISTICS

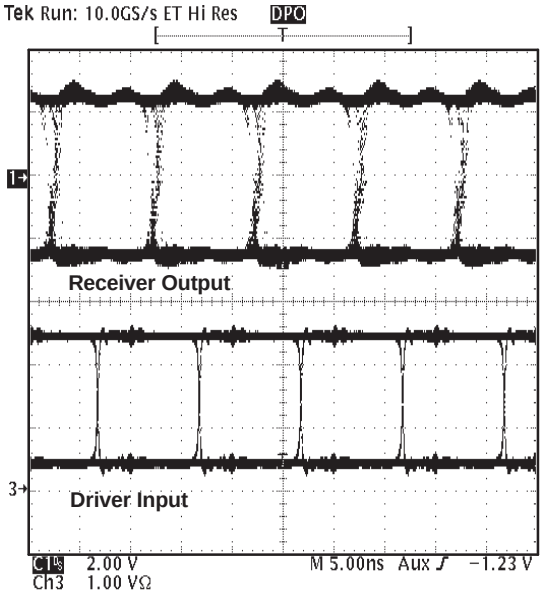

Figure 9. Typical Waveform of Nonreturn-to-Zero (NRZ), Pseudorandom Binary Sequence (PRBS) Data at 100 Mbps Through 15m, of CAT 5 Unshielded Twisted Pair (UTP) Cable

TIA/EIA-485-A defines a maximum signaling rate as that in which the transition time of the voltage transition of a logic-state change remains less than or equal to 30% of the bit length. Transition times of greater length perform quite well even though they do not meet the standard by definition.

Copyright © 2000–2009, Texas Instruments Incorporated

TYPICAL CHARACTERISTICS (continued)

AVERAGE SUPPLY CURRENT vs FREQUENCY

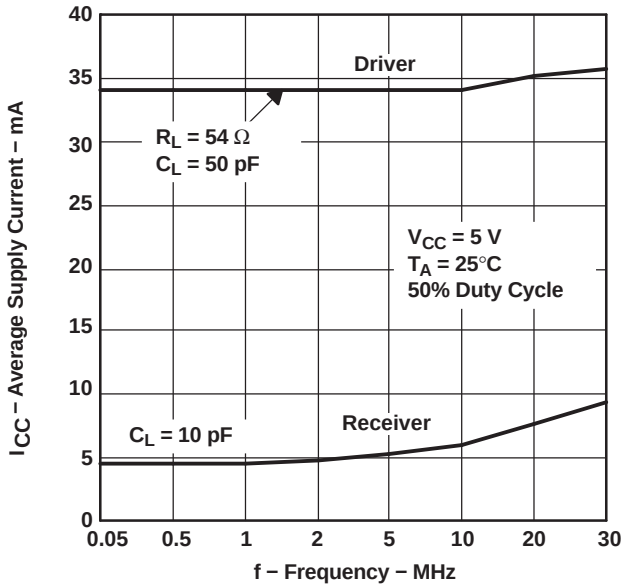

Figure 10.

LOGIC INPUT CURRENT vs INPUT VOLTAGE

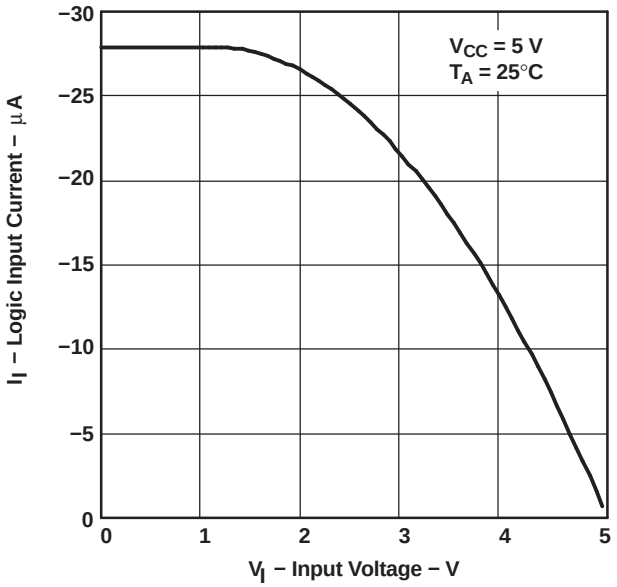

Figure 11.

BUS INPUT CURRENT vs INPUT VOLTAGE

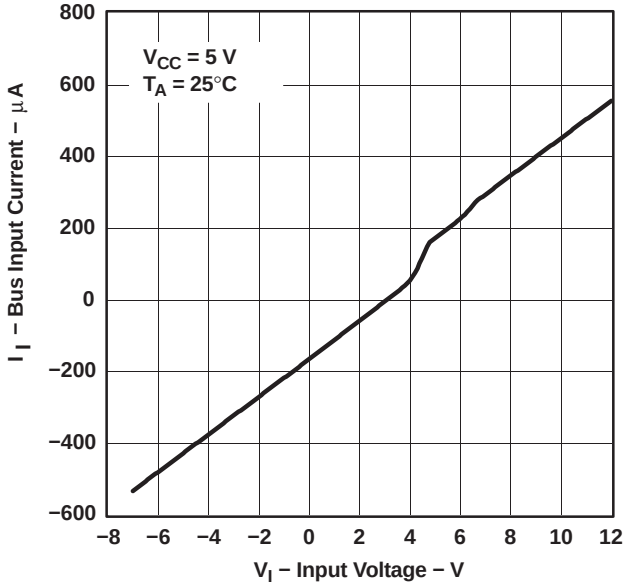

Figure 12.

DRIVER LOW-LEVEL OUTPUT VOLTAGE vs LOW-LEVEL OUTPUT CURRENT

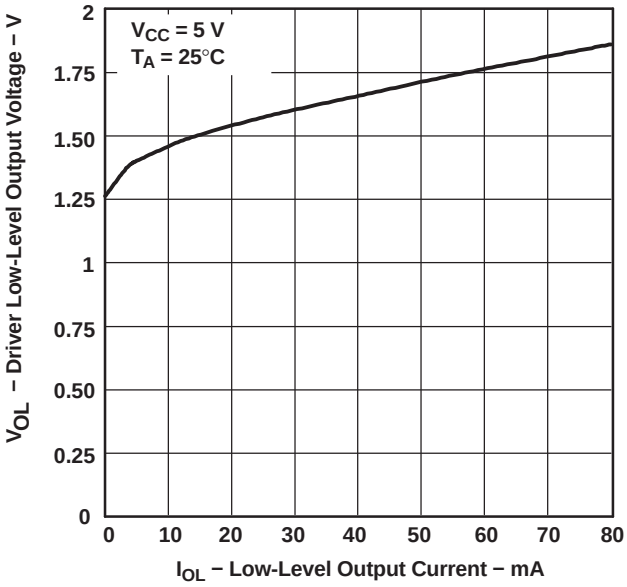

Figure 13.

TYPICAL CHARACTERISTICS (continued)

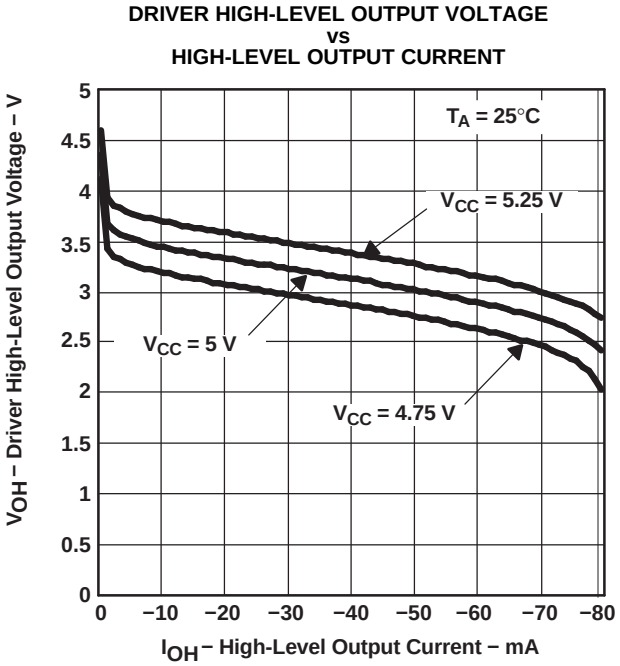

Figure 14.

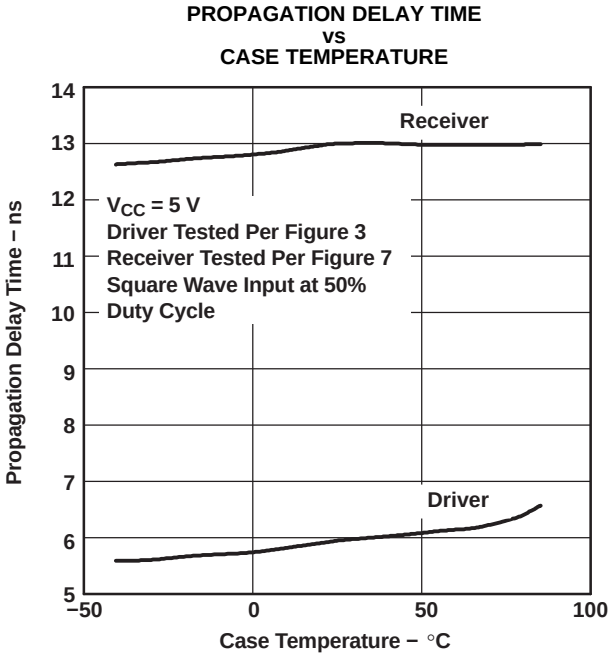

Figure 15.

Copyright © 2000–2009, Texas Instruments Incorporated

APPLICATION INFORMATION

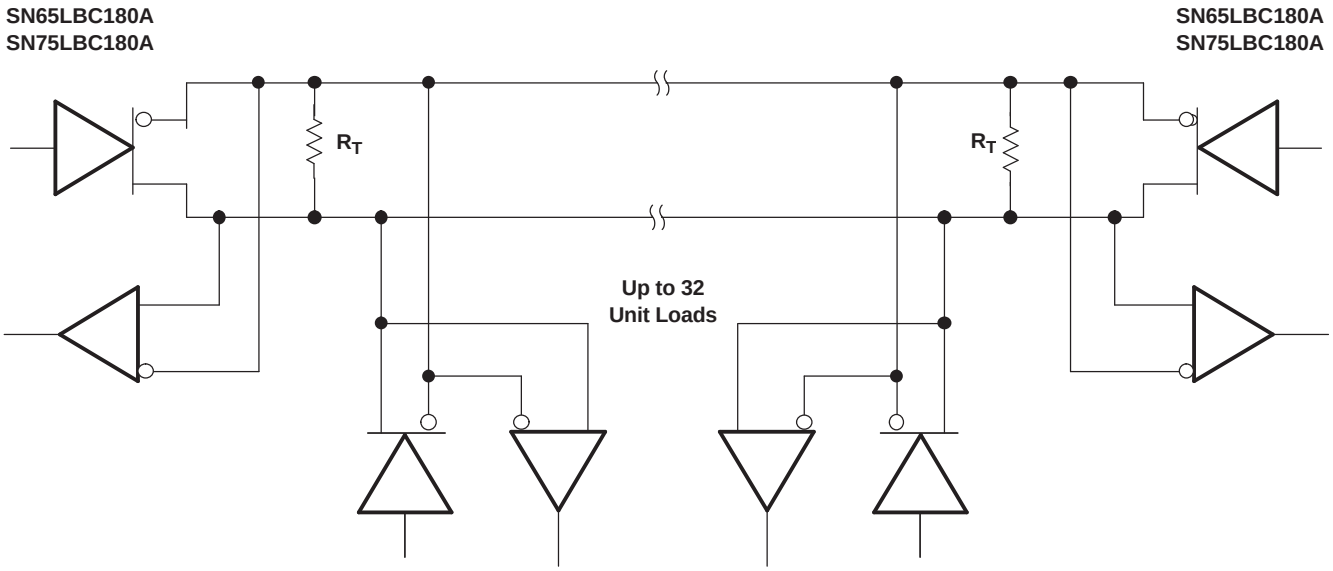

A. The line should be terminated at both ends in its characteristic impedance ($R_T = Z_O$). Stub lengths off the main line should be kept as short as possible. One SN65LBC180A typically represents less than one unit load.

Figure 16. Typical Application Circuit

Revision History

PACKAGING INFORMATION

Orderable Device	Status [1]	Package Type	Package Drawing	Pins	Package Qty	Eco Plan [2]	Lead/Ball Finish	MSL Peak Temp [3]
SN65LBC180AD	ACTIVE	SOIC	D	14	50	Green (RoHS & no Sb/Br)	CU NIPDAU	Level-1-260C-UNLIM
SN65LBC180ADG4	ACTIVE	SOIC	D	14	50	Green (RoHS & no Sb/Br)	CU NIPDAU	Level-1-260C-UNLIM
SN65LBC180ADR	ACTIVE	SOIC	D	14	2500	Green (RoHS & no Sb/Br)	CU NIPDAU	Level-1-260C-UNLIM
SN65LBC180ADRG4	ACTIVE	SOIC	D	14	2500	Green (RoHS & no Sb/Br)	CU NIPDAU	Level-1-260C-UNLIM
SN65LBC180AN	ACTIVE	PDIP	N	14	25	Pb-Free (RoHS)	CU NIPDAU	N / A for Pkg Type
SN65LBC180ANE4	ACTIVE	PDIP	N	14	25	Pb-Free (RoHS)	CU NIPDAU	N / A for Pkg Type
SN75LBC180AD	ACTIVE	SOIC	D	14	50	Green (RoHS & no Sb/Br)	CU NIPDAU	Level-1-260C-UNLIM
SN75LBC180ADG4	ACTIVE	SOIC	D	14	50	Green (RoHS & no Sb/Br)	CU NIPDAU	Level-1-260C-UNLIM
SN75LBC180ADR	ACTIVE	SOIC	D	14	2500	Green (RoHS & no Sb/Br)	CU NIPDAU	Level-1-260C-UNLIM
SN75LBC180ADRG4	ACTIVE	SOIC	D	14	2500	Green (RoHS & no Sb/Br)	CU NIPDAU	Level-1-260C-UNLIM
SN75LBC180AN	ACTIVE	PDIP	N	14	25	Pb-Free (RoHS)	CU NIPDAU	N / A for Pkg Type
SN75LBC180ANE4	ACTIVE	PDIP	N	14	25	Pb-Free (RoHS)	CU NIPDAU	N / A for Pkg Type

[1] The marketing status values are defined as follows:
ACTIVE: Product device recommended for new designs.
LIFEBUY: TI has announced that the device will be discontinued, and a lifetime-buy period is in effect.
NRND: Not recommended for new designs. Device is in production to support existing customers, but TI does not recommend using this part in a new design.
PREVIEW: Device has been announced but is not in production. Samples may or may not be available.
OBSOLETE: TI has discontinued the production of the device.

[2] Eco Plan - The planned eco-friendly classification: Pb-Free (RoHS), Pb-Free (RoHS Exempt), or Green (RoHS & no Sb/Br) - please check http://www.ti.com/productcontent for the latest availability information and additional product content details.
TBD: The Pb-Free/Green conversion plan has not been defined.
Pb-Free (RoHS): TI's terms "Lead-Free" or "Pb-Free" mean semiconductor products that are compatible with the current RoHS requirements for all 6 substances, including the requirement that lead not exceed 0.1% by weight in homogeneous materials. Where designed to be soldered at high temperatures, TI Pb-Free products are suitable for use in specified lead-free processes.
Pb-Free (RoHS Exempt): This component has a RoHS exemption for either 1) lead-based flip-chip solder bumps used between the die and package, or 2) lead-based die adhesive used between the die and leadframe. The component is otherwise considered Pb-Free (RoHS compatible) as defined above.
Green (RoHS & no Sb/Br): TI defines "Green" to mean Pb-Free (RoHS compatible), and free of Bromine (Br) and Antimony (Sb) based flame retardants (Br or Sb do not exceed 0.1% by weight in homogeneous material)

[3] MSL, Peak Temp. -- The Moisture Sensitivity Level rating according to the JEDEC industry standard classifications, and peak solder temperature.

Important Information and Disclaimer: The information provided on this page represents TI's knowledge and belief as of the date that it is provided. TI bases its knowledge and belief on information provided by third parties, and makes no representation or warranty as to the accuracy of such information. Efforts are underway to better integrate information from third parties. TI has taken and continues to take reasonable steps to provide representative and accurate information but may not have conducted destructive testing or chemical analysis on incoming materials and chemicals. TI and TI suppliers consider certain information to be proprietary, and thus CAS numbers and other limited information may not be available for release.

In no event shall TI's liability arising out of such information exceed the total purchase price of the TI part(s) at issue in this document sold by TI to Customer on an annual basis.

TAPE AND REEL INFORMATION

REEL DIMENSIONS

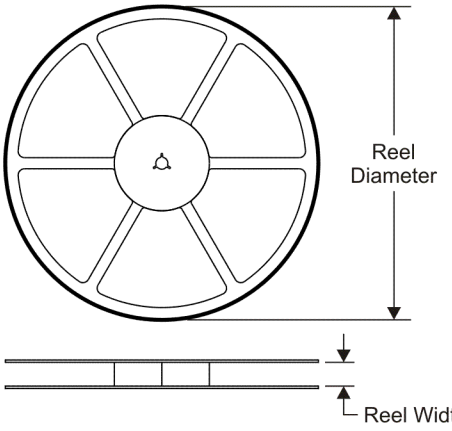

TAPE DIMENSIONS

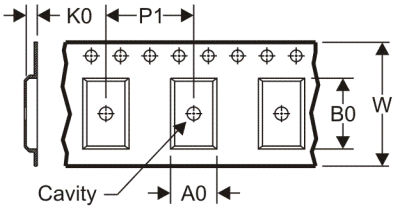

A0	Dimension designed to accommodate the component width
B0	Dimension designed to accommodate the component length
K0	Dimension designed to accommodate the component thickness
W	Overall width of the carrier tape
P1	Pitch between successive cavity centers

QUADRANT ASSIGNMENTS FOR PIN 1 ORIENTATION IN TAPE

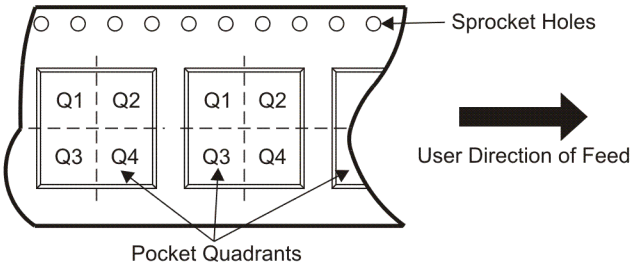

*All dimensions are nominal

Device	Package Type	Package Drawing	Pins	SPQ	Reel Diameter (mm)	Reel Width W1 (mm)	A0 (mm)	B0 (mm)	K0 (mm)	P1 (mm)	W (mm)	Pin1 Quadrant
SN65LBC180ADR	SOIC	D	14	2500	330.0	16.4	6.5	9.0	2.1	8.0	16.0	Q1
SN75LBC180ADR	SOIC	D	14	2500	330.0	16.4	6.5	9.0	2.1	8.0	16.0	Q1

TAPE AND REEL BOX DIMENSIONS

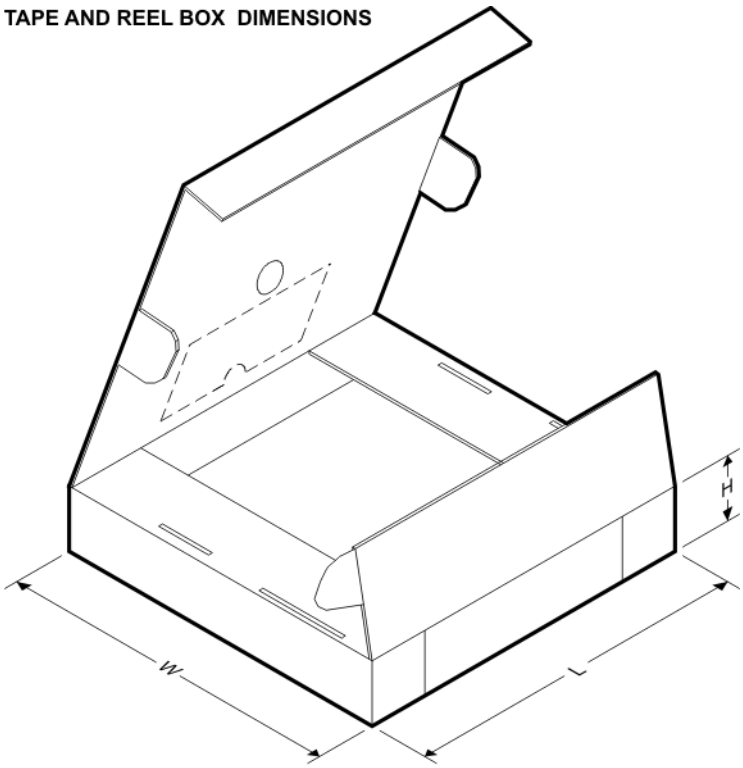

*All dimensions are nominal

Device	Package Type	Package Drawing	Pins	SPQ	Length (mm)	Width (mm)	Height (mm)
SN65LBC180ADR	SOIC	D	14	2500	333.2	345.9	28.6
SN75LBC180ADR	SOIC	D	14	2500	333.2	345.9	28.6

D (R–PDSO–G14) PLASTIC SMALL OUTLINE

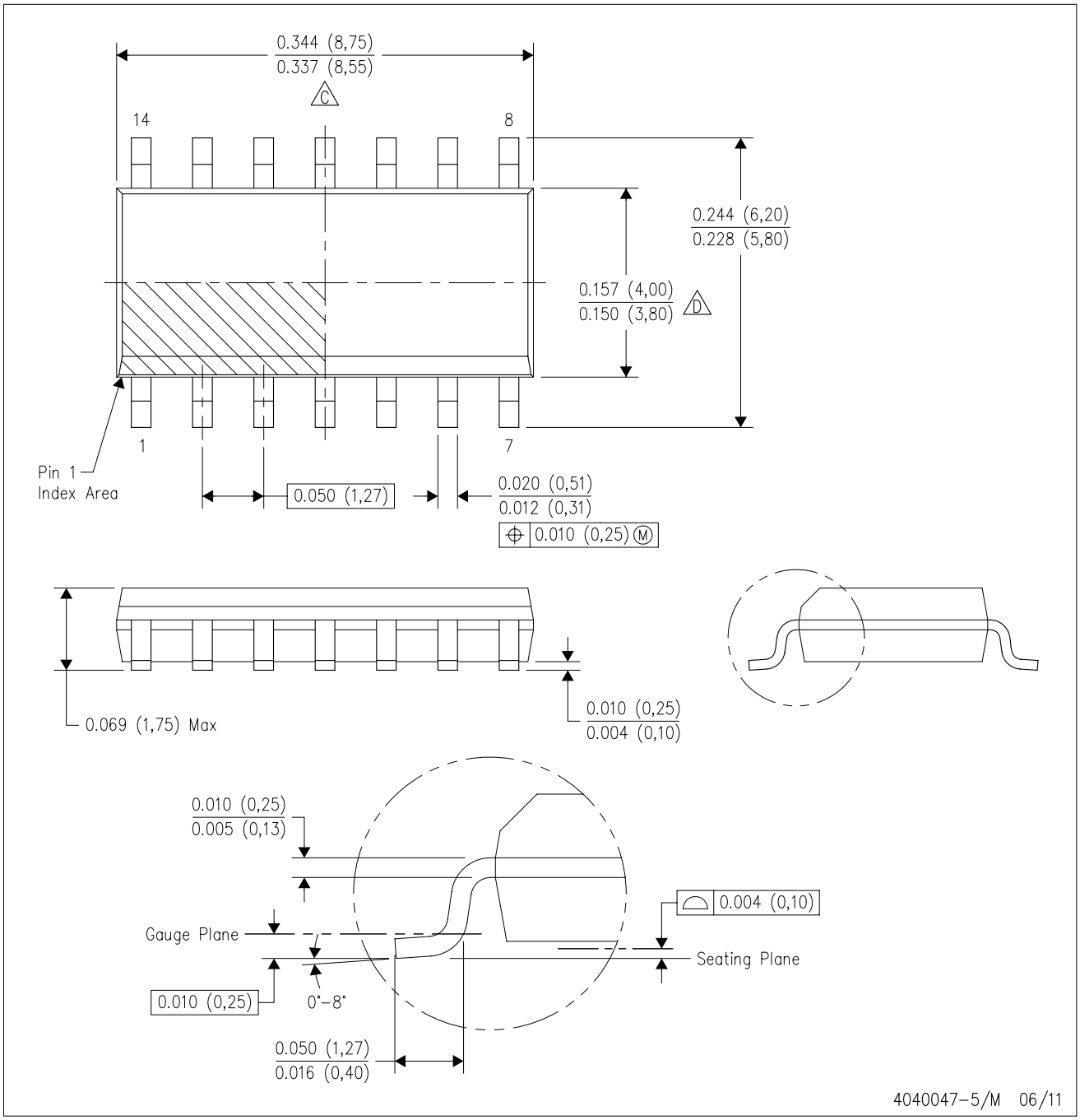

NOTES:
A. All linear dimensions are in inches (millimeters).
B. This drawing is subject to change without notice.
C. Body length does not include mold flash, protrusions, or gate burrs. Mold flash, protrusions, or gate burrs shall not exceed 0.006 (0,15) each side.
D. Body width does not include interlead flash. Interlead flash shall not exceed 0.017 (0,43) each side.
E. Reference JEDEC MS–012 variation AB.

IMPORTANT NOTICE

Texas Instruments Incorporated and its subsidiaries (TI) reserve the right to make corrections, modifications, enhancements, improvements, and other changes to its products and services at any time and to discontinue any product or service without notice. Customers should obtain the latest relevant information before placing orders and should verify that such information is current and complete. All products are sold subject to TI's terms and conditions of sale supplied at the time of order acknowledgment.

TI warrants performance of its hardware products to the specifications applicable at the time of sale in accordance with TI's standard warranty. Testing and other quality control techniques are used to the extent TI deems necessary to support this warranty. Except where mandated by government requirements, testing of all parameters of each product is not necessarily performed.

TI assumes no liability for applications assistance or customer product design. Customers are responsible for their products and applications using TI components. To minimize the risks associated with customer products and applications, customers should provide adequate design and operating safeguards.

TI does not warrant or represent that any license, either express or implied, is granted under any TI patent right, copyright, mask work right, or other TI intellectual property right relating to any combination, machine, or process in which TI products or services are used. Information published by TI regarding third-party products or services does not constitute a license from TI to use such products or services or a warranty or endorsement thereof. Use of such information may require a license from a third party under the patents or other intellectual property of the third party, or a license from TI under the patents or other intellectual property of TI.

Reproduction of TI information in TI data books or data sheets is permissible only if reproduction is without alteration and is accompanied by all associated warranties, conditions, limitations, and notices. Reproduction of this information with alteration is an unfair and deceptive business practice. TI is not responsible or liable for such altered documentation. Information of third parties may be subject to additional restrictions.

Resale of TI products or services with statements different from or beyond the parameters stated by TI for that product or service voids all express and any implied warranties for the associated TI product or service and is an unfair and deceptive business practice. TI is not responsible or liable for any such statements.

TI products are not authorized for use in safety-critical applications (such as life support) where a failure of the TI product would reasonably be expected to cause severe personal injury or death, unless officers of the parties have executed an agreement specifically governing such use. Buyers represent that they have all necessary expertise in the safety and regulatory ramifications of their applications, and acknowledge and agree that they are solely responsible for all legal, regulatory and safety-related requirements concerning their products and any use of TI products in such safety-critical applications, notwithstanding any applications-related information or support that may be provided by TI. Further, Buyers must fully indemnify TI and its representatives against any damages arising out of the use of TI products in such safety-critical applications.

TI products are neither designed nor intended for use in military/aerospace applications or environments unless the TI products are specifically designated by TI as military-grade or "enhanced plastic." Only products designated by TI as military-grade meet military specifications. Buyers acknowledge and agree that any such use of TI products which TI has not designated as military-grade is solely at the Buyer's risk, and that they are solely responsible for compliance with all legal and regulatory requirements in connection with such use.

TI products are neither designed nor intended for use in automotive applications or environments unless the specific TI products are designated by TI as compliant with ISO/TS 16949 requirements. Buyers acknowledge and agree that, if they use any non-designated products in automotive applications, TI will not be responsible for any failure to meet such requirements.

Following are URLs where you can obtain information on other Texas Instruments products and application solutions:

Products		**Applications**	
Audio	www.ti.com/audio	Communications and Telecom	www.ti.com/communications
Amplifiers	amplifier.ti.com	Computers and Peripherals	www.ti.com/computers
Data Converters	dataconverter.ti.com	Consumer Electronics	www.ti.com/consumer-apps
DLP® Products	www.dlp.com	Energy and Lighting	www.ti.com/energy
DSP	dsp.ti.com	Industrial	www.ti.com/industrial
Clocks and Timers	www.ti.com/clocks	Medical	www.ti.com/medical
Interface	interface.ti.com	Security	www.ti.com/security
Logic	logic.ti.com	Space, Avionics and Defense	www.ti.com/space-avionics-defense
Power Mgmt	power.ti.com	Transportation and Automotive	www.ti.com/automotive
Microcontrollers	microcontroller.ti.com	Video and Imaging	www.ti.com/video
RFID	www.ti-rfid.com	Wireless	www.ti.com/wireless-apps
RF/IF and ZigBee® Solutions	www.ti.com/lprf		

TI E2E Community Home Page e2e.ti.com

Mailing Address: Texas Instruments, Post Office Box 655303, Dallas, Texas 75265
Copyright © 2011, Texas Instruments Incorporated